TRIUMPH® HD

10x42 BINOCULAR

Triumph® HD 42mm Models	
Model	**Features**
TRI-1042	10x
TRI-1042-RTAPX	10x / Realtree® APX Camo
TRI-1042-RTAPX-WU	10x / Whitetails Unlimited™ Edition

Parts

ITEM NO.	PART NUMBER	DESCRIPTION	QTY.	NOTES
1	A-00819-0	Eyecup Assembly	2	Includes 2,3,4,5 and ECA inner
2	C-04281-0	Eyecup Rubber	2	
3	C-04282-0	Outer Eyecup Ring	2	
4	C-00064-0	Eyecup Tensioner	6	
5	C-00397-0	Eyecup Assembly Screw	6	
6	C-00461-0	Focus Knob	1	
7	C-04280-0	Focus Knob Rubber	1	
8	C-04506-0	Triumph® Focus Knob Badge	1	
9	C-04278-0	TASC	1	Sent Together
10	C-02852-0	Tripod Adaptor Socket Cover Badge	1	
11	C-00309-0	Vortex® Badge	1	
12	C-00432-0	Oval VTX Badge	1	

In-Box Accessories

ITEM NO.	PART NUMBER	DESCRIPTION	QTY.	NOTES
	C-00127-0	Comfort Neck Strap	1	
	C-02058-0	GlassPak Harness Only	1	
	C-02357-0	Objective Lens Cover 42mm	1	
	C-02367-0	GlassPak Binocular Case	1	
	C-02963-0	Lens Cloth	1	
	C-04684-0	Rainguard Eyepiece Cover	1	
	M-00228-0	Glasspak Binocular Manual	1	
	M-00332-0	Triumph® Owners Manual	1	

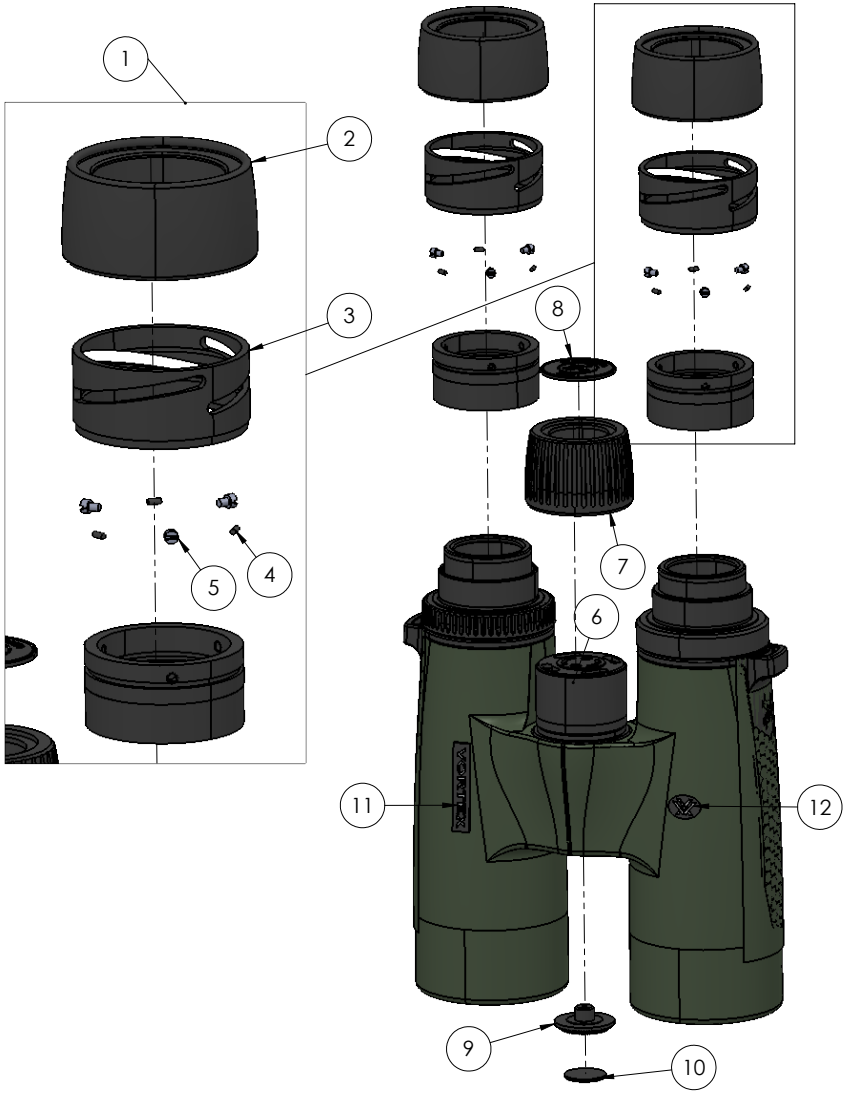

© 2026 Vortex Optics. ® Registered Trademark and TM Trademark of Vortex Optics.